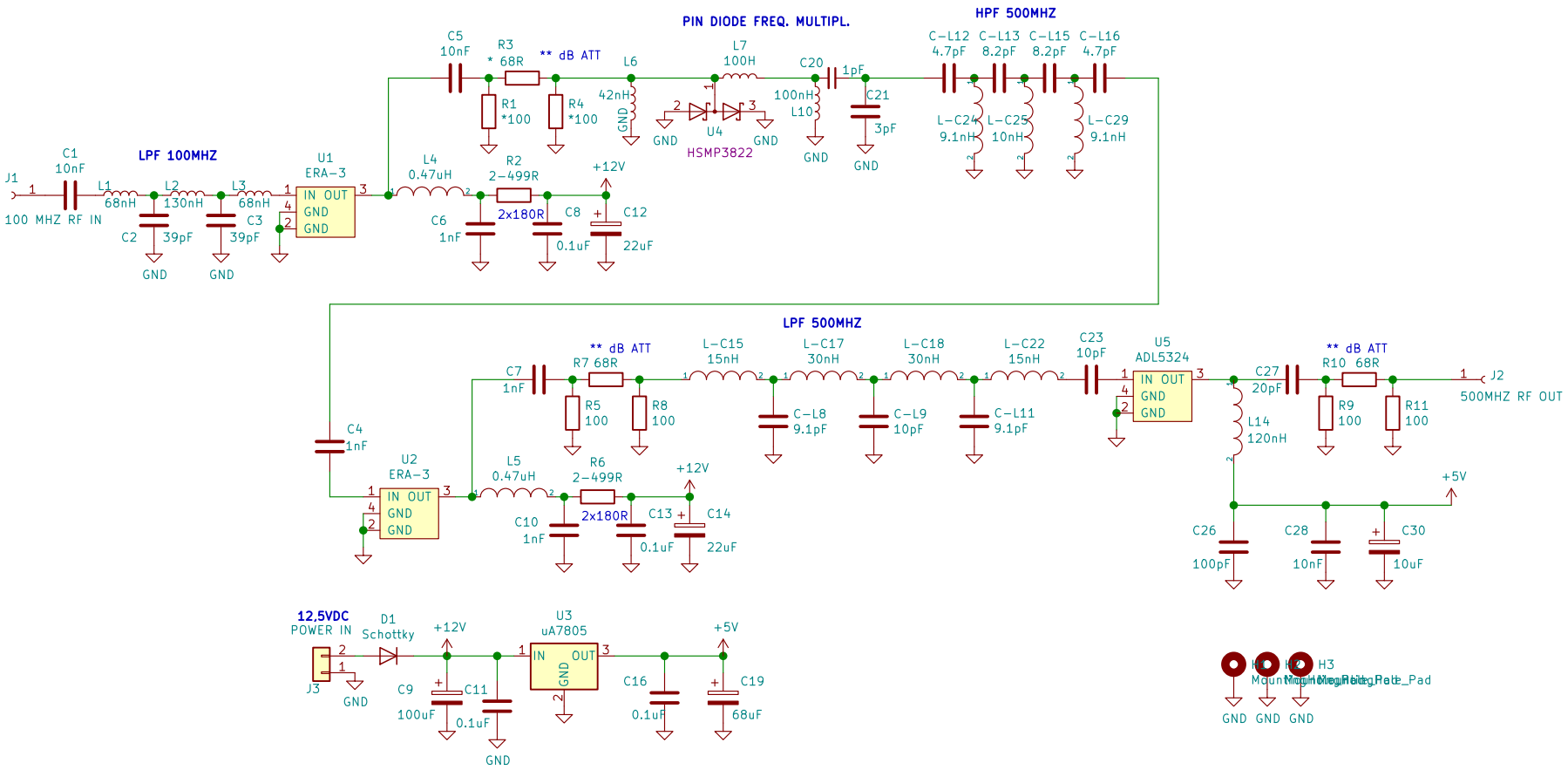

4Z4LS (c) 2019

Sheet: /
File: MULTIPL FOR COMB.sch

Title: MULTILPAYER FOR COMB GENERATOR

Size: A4	Date: sept. 2019	**Rev: 01**
KiCad E.D.A. kicad (5.1.2)-2		Id: 1/1