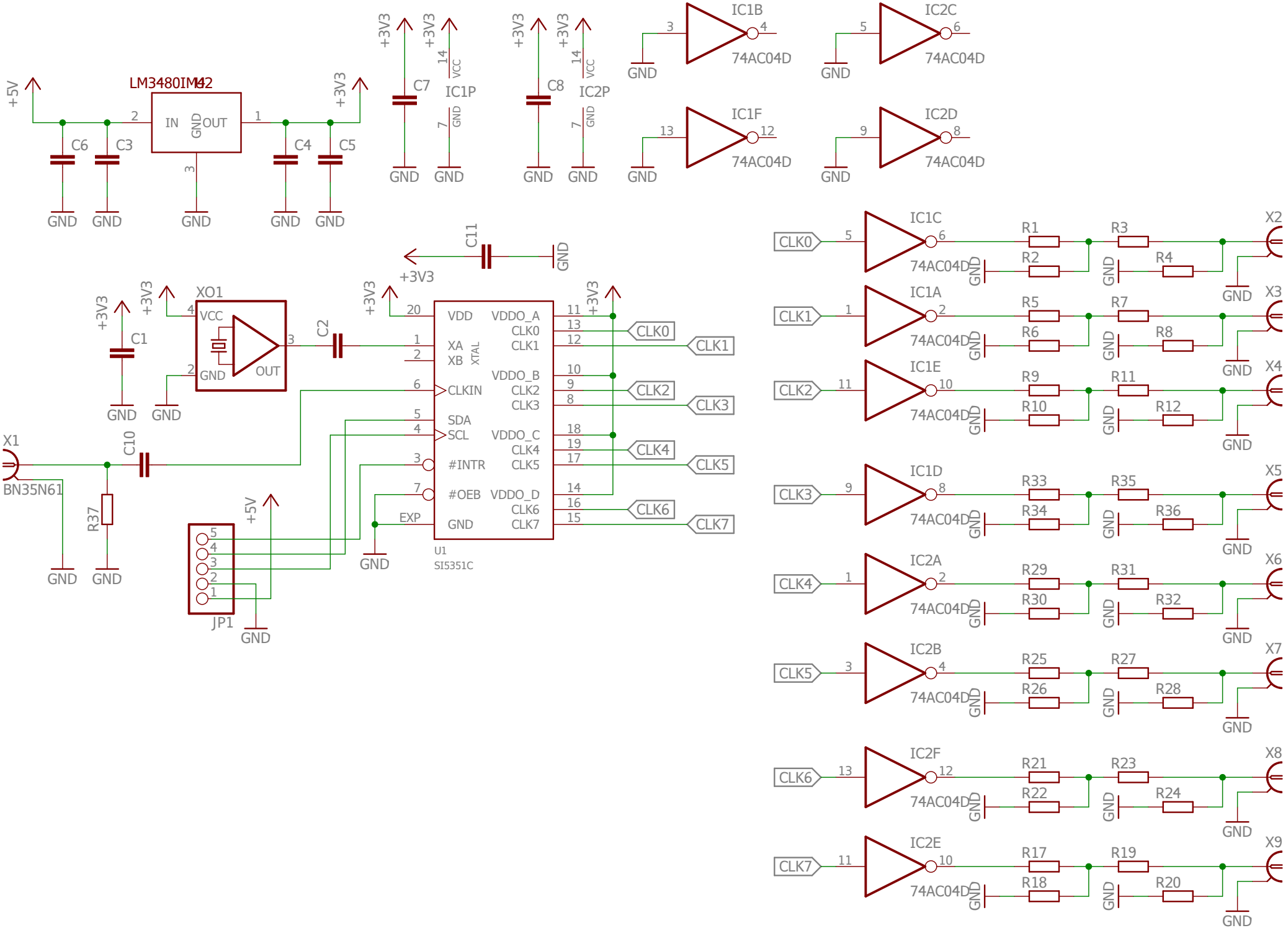

9/21/2018 1:42 PM f=1.25 c:\eagle\projects\JDat\Ham_Box\Si5353c\si5351c.sch (Sheet: 1/1)