ADALM-PLUTO failure diagnosis: short on 5V supply

Achim Vollhardt, DH2VA/HB9DUN

Sept 2020

Situation

Matthias, DL5QY wrote in the AMSAT-DL forum, that he had a dead PLUTO pulling 2A on the 5V supply. I asked him to send me the unit for failure diagnosis and hopefully some insight how to prevent such failures in the future.

First assessment

According to DL5QY, Pin 1 of the data USB socket has burn marks. This was the socket which was also used to power the unit. An initial powering test with a current limited lab power supply resulted in the USB power selector U9 (NCP339) getting hot. This was easily verified by ethanol locally boiling away. After injecting 5V further down the line at the net VIN_5V_USB, the short became very low in resistance and as a result, the power being delivered by the lab supply was only 0.2V @2A (current limit). Imaging the board with a thermal IR camera discovered the common mode choke L7 to be the problem. Unsoldering this without damaging the board proved to be rather tricky due to the secondary side being thermally tightly connected to both PGND and GND.

After pulling L7 off the board a check with a continuity tester showed all 4 pads having low-resistance paths to each other. This is obviously not correct, and a short test with a jumper wire instead of L7 showed the PLUTO booting.

Removing the EMI shield of L7 showed a burned secondary winding (Figure 2, visibly open winding) which is likely also the reason for the hard short-circuit between the two windings and hence the 4 pads altogether. It seems obvious that some serious current must have been flowing through this part (which is rated to 30 VAC and 1.8A max.).

Figure 1: opened ADALM-PLUTO (source: Twitter @TheRealMike G0MJW), L7 encircled

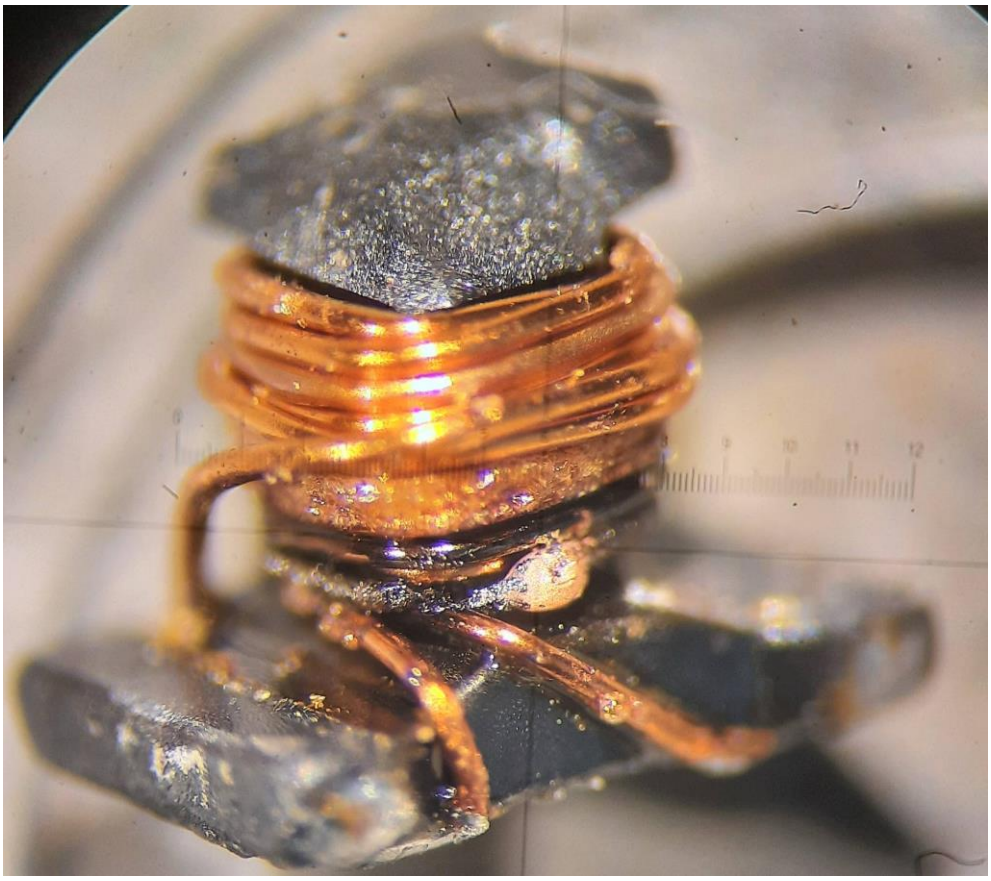

Figure 2: burnt secondary winding (lower center part of image)

Furthermore the data USB socket was removed from the board (which is as difficult as L7 due to its mechanical housing soldered to PGND. It turned out that the burnt pin is actually pin 5 and not pin 1 with pin 5 being the USB ground connection (Figure 3).

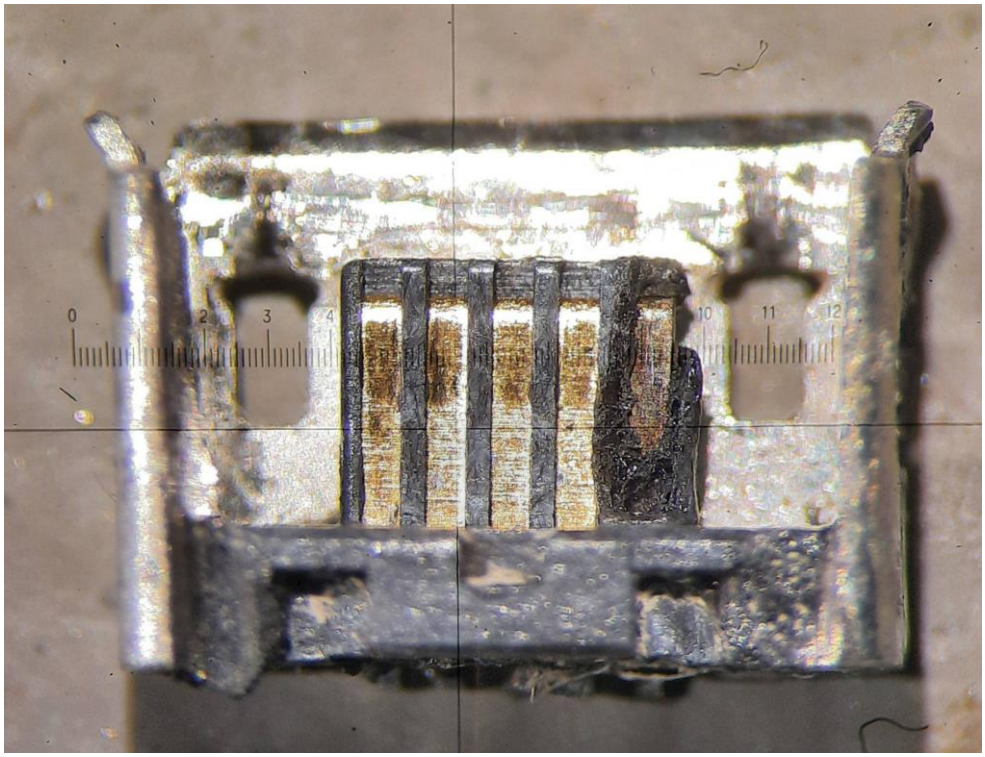

Figure 3: burnt pin 5 of data USB socket (PGND), seen on the right

Hypothesis

Looking at the ADALM PLUTO schematics, we can see that L7 connects with its secondary winding the two separate ground potentials present in the PLUTO: the PGND coming from the host PC and the GND, which is the ground potential of the SMA RF connectors.

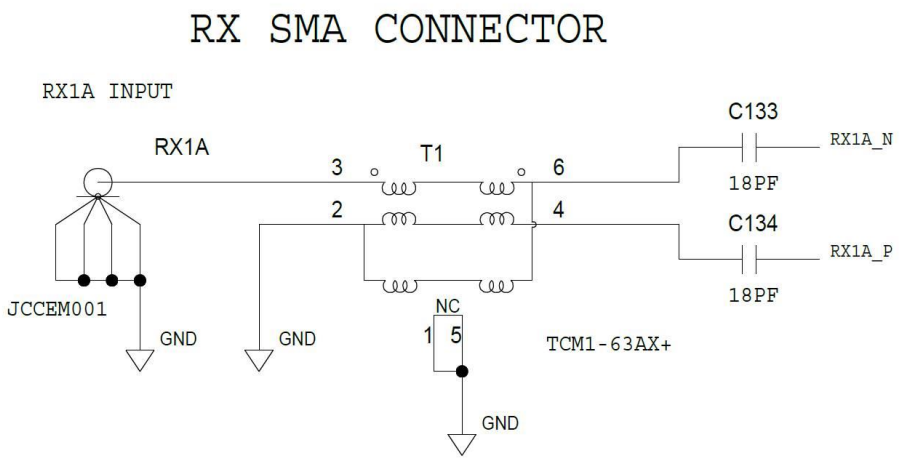

Figure 4: RX SMA connector

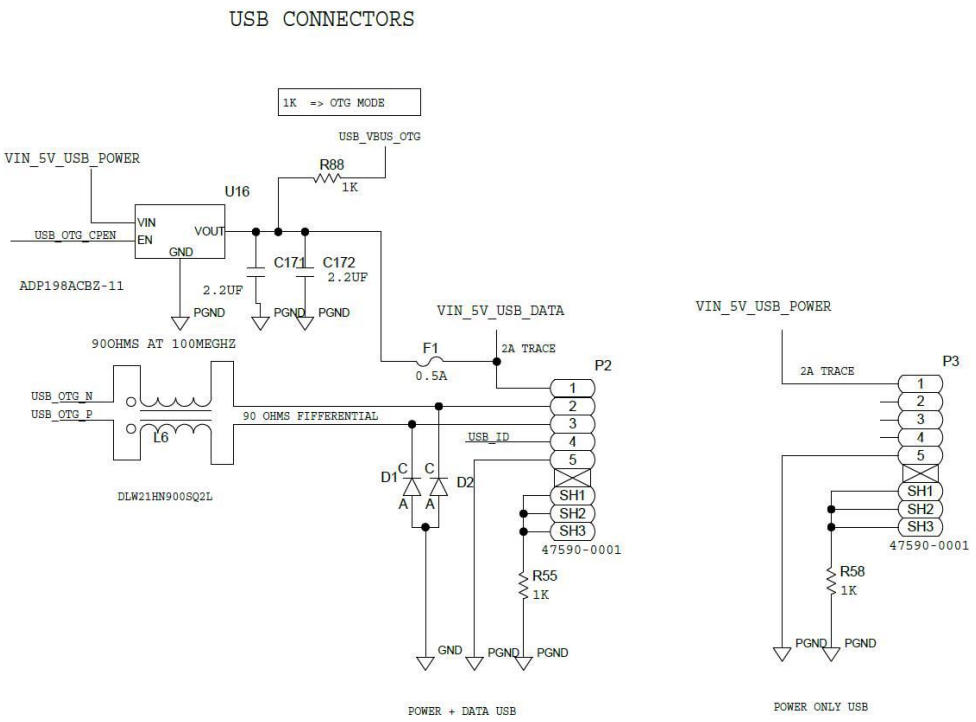

Figure 5: USB sockets (data/power)

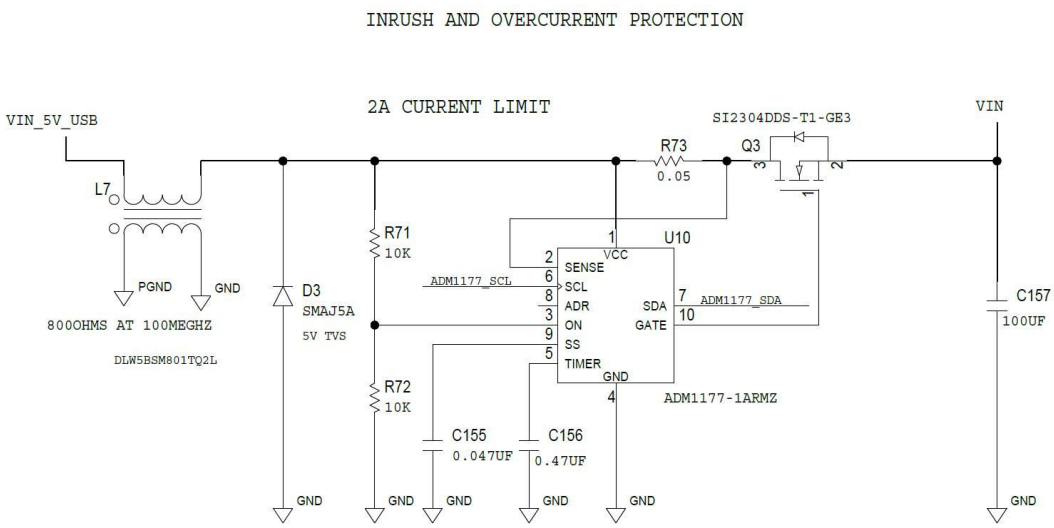

Figure 6: L7 common mode choke, note the GND-PGND connection via its secondary winding

As the internal fuse F1 of the PLUTO was still intact and also no other faulty component could be found, we believe that the short in the secondary winding was caused by a high voltage differential between the ground on the RF side (via the SMA connectors) and the ground on the PC side (via the USB data connector). This lead to an over-current induced short in L7 which shorted the 5V supply line of the PLUTO.

Possible cause and mitigation

The exact cause of this voltage differential cannot be determined with absolute certainty. It might be a static case of faulty grounding or depending on the transmit power of the station a large RF current caused by the local grounding arrangement.
A possible mitigation is to break all possible ground loops. A simple solution is to use an Ethernet connection rather than a direct USB connection to the PLUTO. Using a USB-to-Ethernet adapter with a OTG cable (as described for example by DD1US:
http://www.dd1us.de/Downloads/Connecting%20the%20ADALM%20Pluto%20to%20the%20Local%20Area%20Network%20v2.pdf)

results in an inherent galvanic decoupling as this is part of the Ethernet connection.